KDX-40.55.2HW

Requested data

Flow	0 l/s
Head	0 m
Fluid	
Pumpe type	Single head pump
No. of pumps	1

Operating pump data

Flow	
Head	
Shaft power	
Efficiency	%
Head H(Q=0)	23,9 m
Discharge connection	80 mm
Installation	Permanent subm. installation DN80/PN10
Impeller	Vortex
Free passage	80 mm

Motor data

Frequency	50 Hz
Rated voltage	400 V
Nominal speed	2900 1/min
Number of poles	2
Rated power P2	5,5 kW
Rated current	11,3 A
Motor type	3~
Insulation class	F
Degree of protection	IP 68

Operating limits

Starts per hour max.	20
Maximum temperature of pumped fluid	40 °C
Max. Density	998 kg/m³
Max. viscosity	1 mm²/s

General data

Weight	94 kg
Flameproof version	ATEX II 2G EExd IIB T4

Materials

Pump casing	Grey cast iron
Impeller	Grey cast iron
Wear ring	Steel/rubber
Suction casing	Grey cast iron
Mech. seal on pump side	Silicon carbide/Ceramics
Oil chamber	Grey cast iron
Motor casing	Grey cast iron
Shaft	Stainless steel
Thermal probes	Yes
Conductivity probe	Yes
Mech. seal on motor side	Graphite/Ceramics
Handle	Stainless steel
Power supply cable	10m
Screws and nuts	Stainless steel

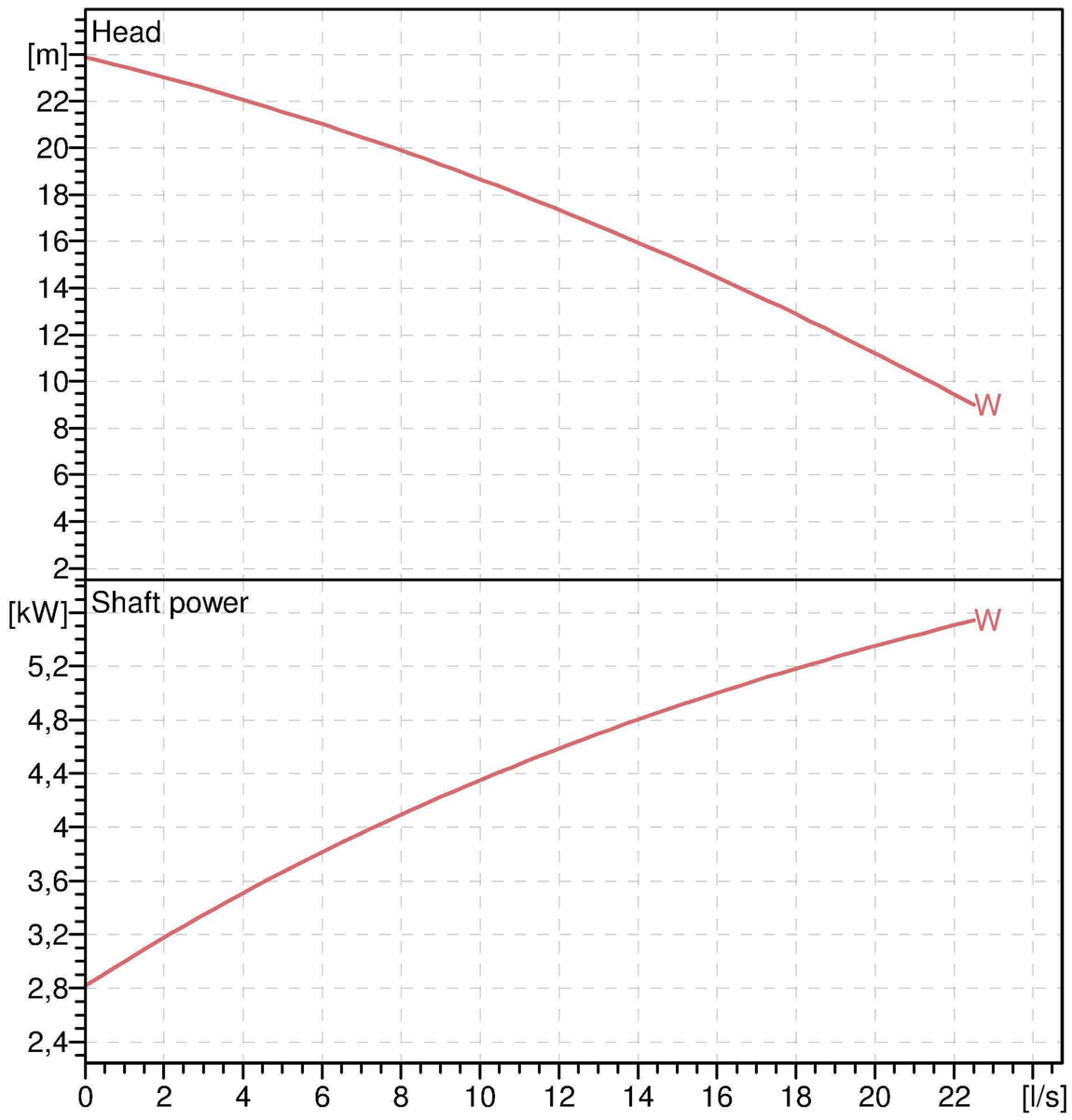

Operating data

ISO 9906 grade 2

Q [l/s]	H [m]	P [kW]	Eff. [%]	NPSH [m]

DIMENSIONS mm

A = 661
a = o2"
B = 292
b = 465
C = 391
D = 146
d = 35
DN = 80/PN10
DNp = 80/PN10
E = 146
e = o12,5
F = 245
f = 40
G = 146
g = 173
h = 130
H = 92
J = 160
K = 200
Ls1 = 529
Ls3 = 275
m = 320
n = 180
N = 80
oX = 18
p = 18
q = 156
r = 110
t = 320
u = 571
v = 102
W = 4

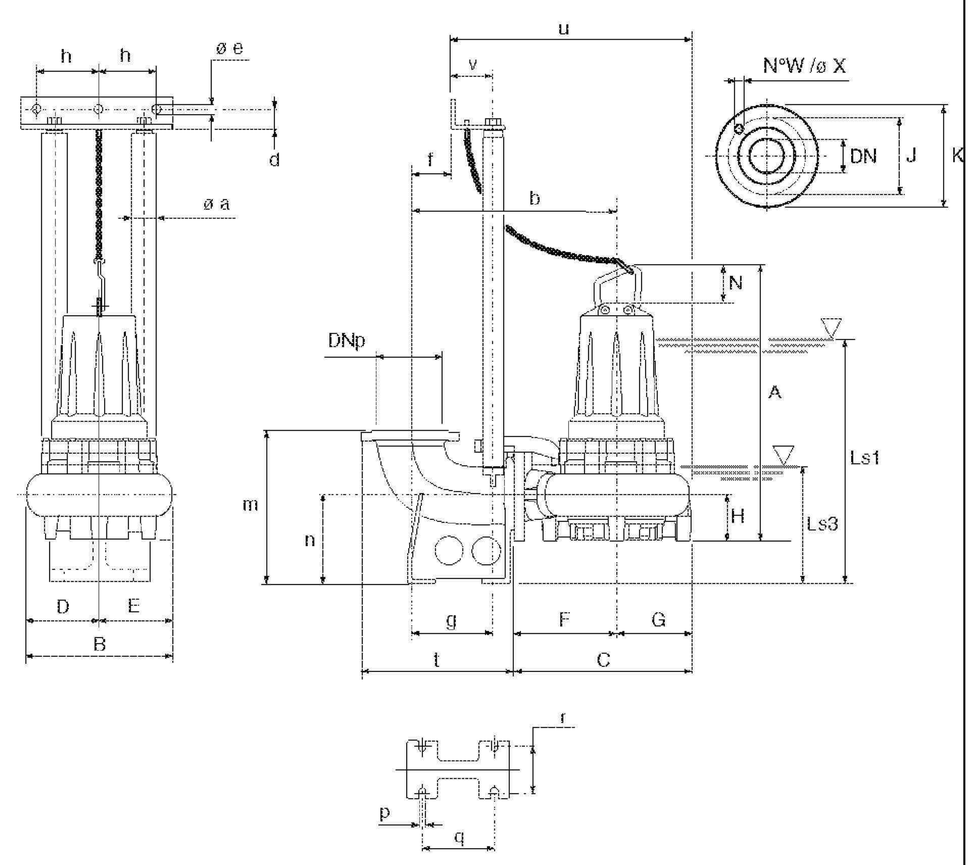

Remarks:

Date	Page	Offer no.	Pos.no