KDX-40.40.6LA

Requested data

Flow	0 l/s
Head	0 m
Fluid	
Pumpe type	Single head pump
No. of pumps	1

Operating pump data

Flow	
Head	
Shaft power	
Efficiency	%
Head H(Q=0)	10,1 m
Discharge connection	100 mm
Installation	Submersed automatic coupling
Impeller	Vortex
Free passage	100 mm

Motor data

Frequency	50 Hz
Rated voltage	400 V
Nominal speed	960 1/min
Number of poles	6
Rated power P2	4 kW
Rated current	9,7 A
Motor type	3~
Insulation class	F
Degree of protection	IP 68

Operating limits

Starts per hour max.	20
Maximum temperature of pumped fluid	40 °C
Max. Density	998 kg/m³
Max. viscosity	1 mm²/s

General data

Weight	121 kg
Flameproof version	ATEX II 2G EExd IIB T4

Materials

Pump casing	Grey cast iron
Impeller	Grey cast iron
Wear ring	Steel/rubber
Suction casing	Grey cast iron
Mech. seal on pump side	Silicon carbide/Ceramics
Oil chamber	Grey cast iron
Motor casing	Grey cast iron
Shaft	Stainless steel
Thermal probes	Yes
Conductivity probe	Yes
Mech. seal on motor side	Graphite/Ceramics
Handle	Stainless steel
Power supply cable	10m
Screws and nuts	Stainless steel

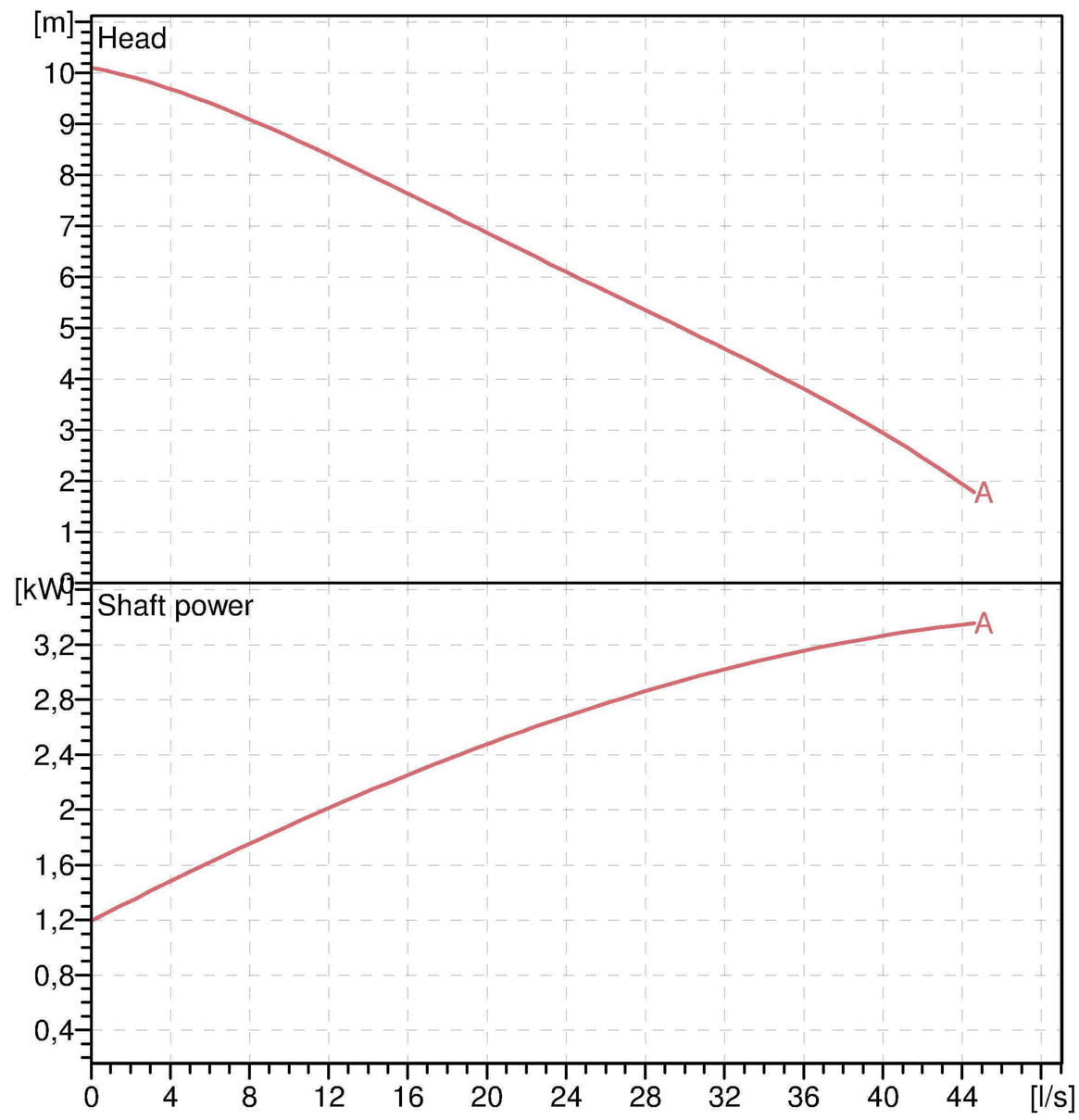

Operating data

ISO 9906 grade 2

Q [l/s]	H [m]	P [kW]	Eff. [%]	NPSH [m]

DIMENSIONS mm

A = 703
a = o2"
B = 350
b = 523
C = 470
D = 175
d = 35
DN = 100/PN16
DNp = 100/PN16
E = 175
e = o12,5
F = 295
f = 48
G = 175
g = 179
H = 112
h = 130
J = 180
K = 220
Ls1 = 690
Ls3 = 305
m = 350
N = 113
n = 200
oX = 18
p = 18
q = 186
r = 135
t = 338
u = 650
v = 102
W = 8

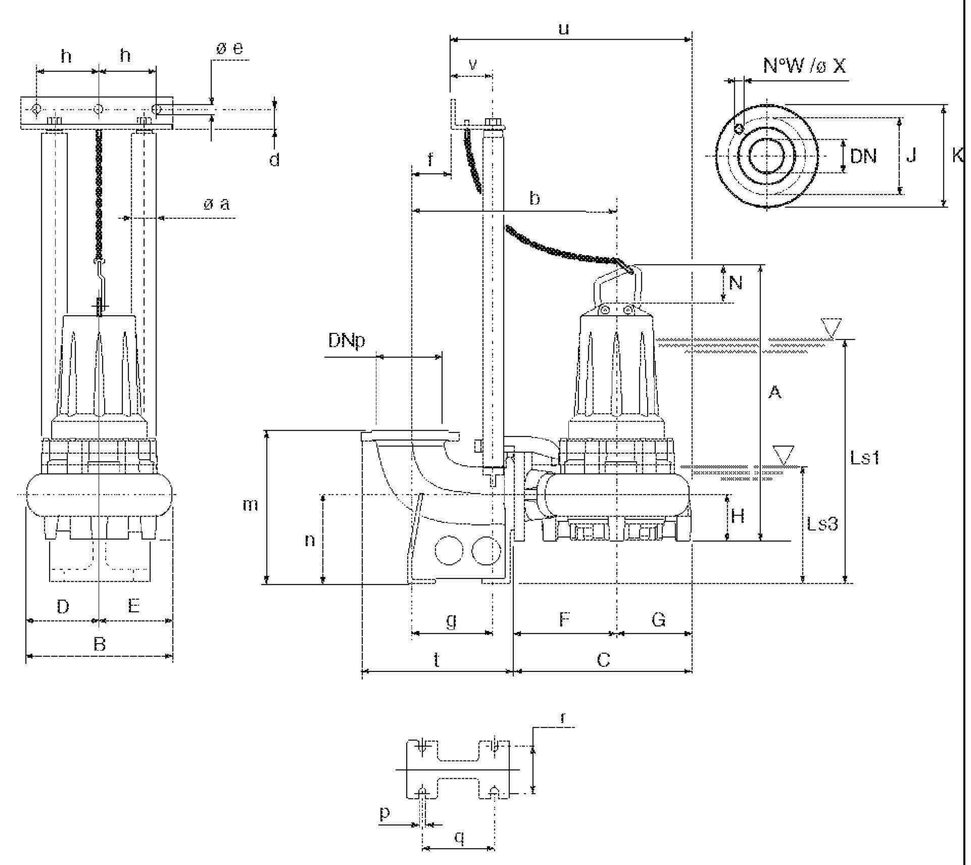

Remarks:

Date	Page	Offer no.	Pos.no