KD-80.320.2ND

Requested data

Flow	0 l/s
Head	0 m
Fluid	Water, clean
Pumpe type	Single head pump
No. of pumps	1

Operating pump data

Flow	
Head	
Shaft power	
Efficiency	%
Head H(Q=0)	55.8 m
Discharge connection	100 mm
Installation	Submersed automatic coupling
Impeller	
Free passage	80 mm

Motor data

Frequency	50 Hz
Rated voltage	400 V
Nominal speed	2900 1/min
Number of poles	2
Rated power P2	32 kW
Rated current	46.8 A
Motor type	3~
Insulation class	F
Degree of protection	IP 68

Operating limits

Starts per hour max.	20
Maximum temperature of pumped fluid	313 K
Max. Density	998 kg/m³
Max. viscosity	1 mm²/s

General data

Weight	333 kg

Materials

Pump casing	Cast iron
Impeller	Cast iron
Wear ring	Steel/rubber
Shaft	Stainless steel
Mech. seal on pump side	Silicon carbide/Sil. Carbide
Oil chamber	Cast iron
Motor casing	Cast iron
Outer shell (version R)	Stainless steel
Thermal probes	Yes
Conductivity probe	Yes
Mech. seal on motor side	Graphite/Stainless steel
Screws and nuts	Stainless steel
Handle	Stainless steel
Power supply cable	10m

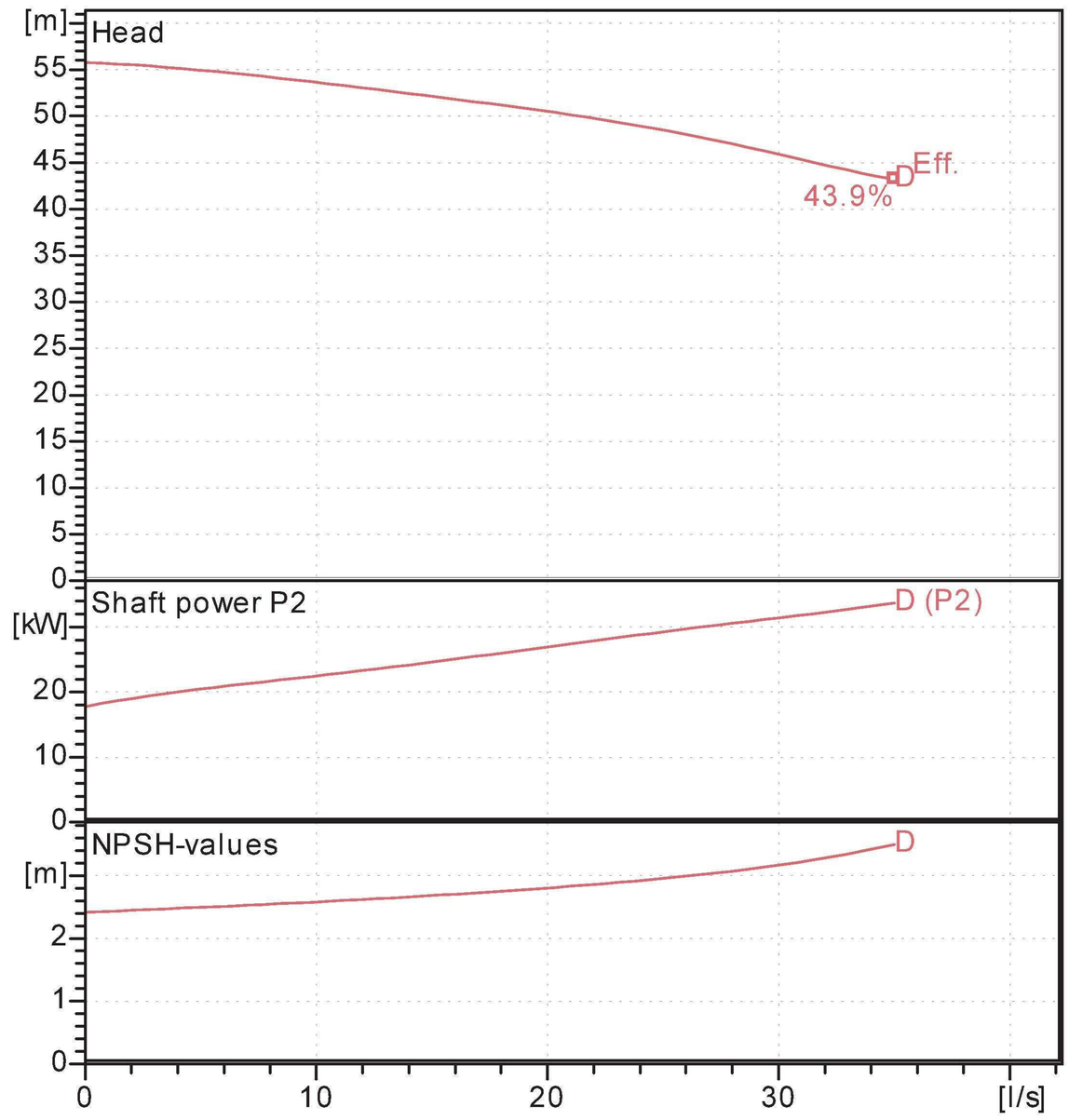

Operating data

ISO 9906 GRADE 2

Q [l/s]	H [m]	P [kW]	eff [%]	NPSH [m]

Dimensions mm

A = 1075
b = 563
B = 400
C = 553
d = 35
D = 200
DN = 100/PN16
E = 200
f = 48
F = 335
g = 179
G = 218
h = 130
H = 110
J = 180
K = 220
Ls1 = 900
Ls3 = 370
m = 350
n = 200
øa" = 2
øe = 12.5
øX = 18
p = 18
q = 186
r = 135
t = 338
u = 733
v = 102
W = 8

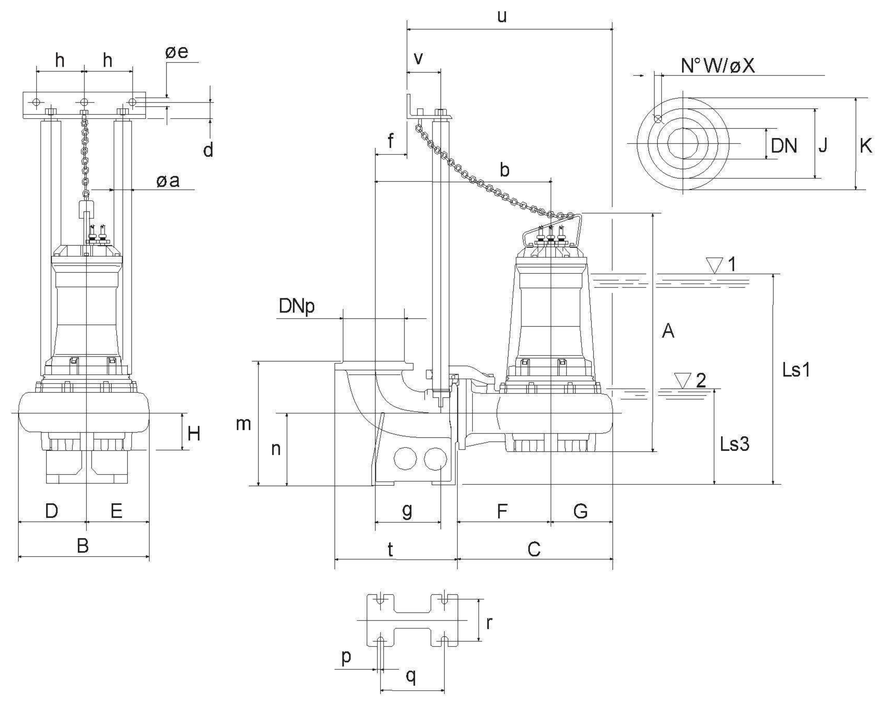

Remarks:

Date	Page	Offer no.	Pos.no
	1		