KCX-80.180.4NG

Requested data

Flow	0 l/s
Head	0 m
Fluid	
Pumpe type	Single head pump
No. of pumps	1

Operating pump data

Flow	
Head	
Shaft power	
Efficiency	%
Head H(Q=0)	31,2 m
Discharge connection	150 mm
Installation	Submersed automatic coupling
Impeller	Single channel
Free passage	115 mm

Motor data

Frequency	50 Hz
Rated voltage	400 V
Nominal speed	1450 1/min
Number of poles	4
Rated power P2	18 kW
Rated current	37 A
Motor type	3~
Insulation class	F
Degree of protection	IP 68

Operating limits

Starts per hour max.	10
Maximum temperature of pumped fluid	40 °C
Max. Density	998 kg/m³
Max. viscosity	1 mm²/s

General data

Weight	354 kg
Flameproof version	ATEX II 2G EExd IIB T4

Materials

Pump casing	Cast iron
Impeller	Cast iron
Wear ring	Steel/rubber
Shaft	Stainless steel
Mech. seal on pump side	Silicon carbide/Sil. Carbide
Oil chamber	Cast iron
Motor casing	Cast iron
Outer shell (version R)	Stainless steel
Thermal probes	Yes
Conductivity probe	Yes
Mech. seal on motor side	Graphite/Stainless steel
Screws and nuts	Stainless steel
Power supply cable	10m
Handle	Stainless steel

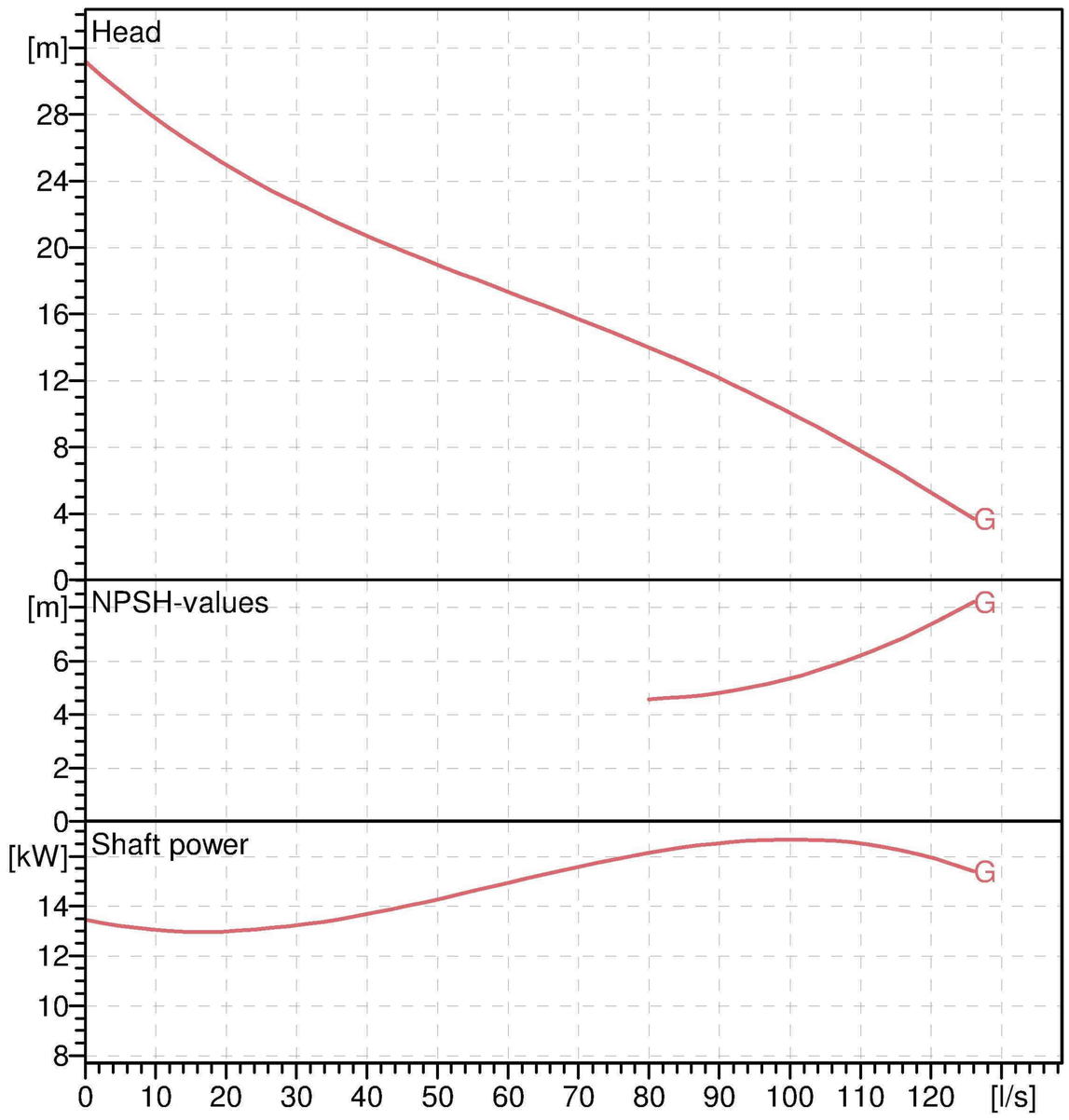

Operating data

ISO 9906 grade 2

Q [l/s]	H [m]	P [kW]	Eff. [%]	NPSH [m]

A = 1125
B = 508
b = 790
C = 658
D = 278
d = 35
DN = 200/PN10
DNp = 200/PN10
E = 230
f = 180
F = 405
G = 253
g = 305
h = 158
H = 160
J = 295
K = 340
Ls1 = 940
Ls3 = 410
m = 540
n = 290
oa" = 3
oe = 12,5
oX = 22
p = 24
q = 280
r = 210
t = 555
u = 863
v = 117
W = 8

DIMENSIONS mm

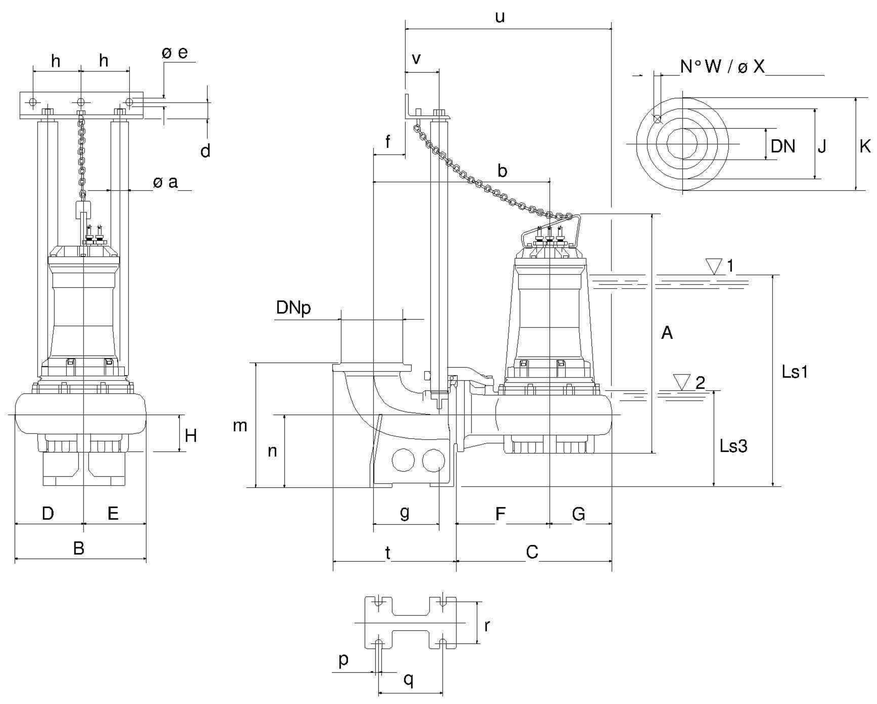

Remarks:

Date	Page	Offer no.	Pos.no