KCX-60.180.6PA

Requested data

Flow	0 l/s
Head	0 m
Fluid	
Pumpe type	Single head pump
No. of pumps	1

Operating pump data

Flow	
Head	
Shaft power	
Efficiency	%
Head H(Q=0)	23 m
Discharge connection	200 mm
Installation	Submersed automatic coupling
Impeller	Single channel
Free passage	135 mm

Motor data

Frequency	50 Hz
Rated voltage	400 V
Nominal speed	960 1/min
Number of poles	6
Rated power P2	18 kW
Rated current	36 A
Motor type	3~
Insulation class	F
Degree of protection	IP 68

Operating limits

Starts per hour max.	10
Maximum temperature of pumped fluid	40 °C
Max. Density	998 kg/m³
Max. viscosity	1 mm²/s

General data

Weight	430 kg
Flameproof version	ATEX II 2G EExd IIB T4

Materials

Pump casing	Cast iron
Impeller	Cast iron
Wear ring	Steel/rubber
Shaft	Stainless steel
Mech. seal on pump side	Silicon carbide/Sil. Carbide
Oil chamber	Cast iron
Motor casing	Cast iron
Outer shell (version R)	Stainless steel
Thermal probes	Yes
Conductivity probe	Yes
Mech. seal on motor side	Graphite/Stainless steel
Screws and nuts	Stainless steel
Power supply cable	10m
Handle	Stainless steel

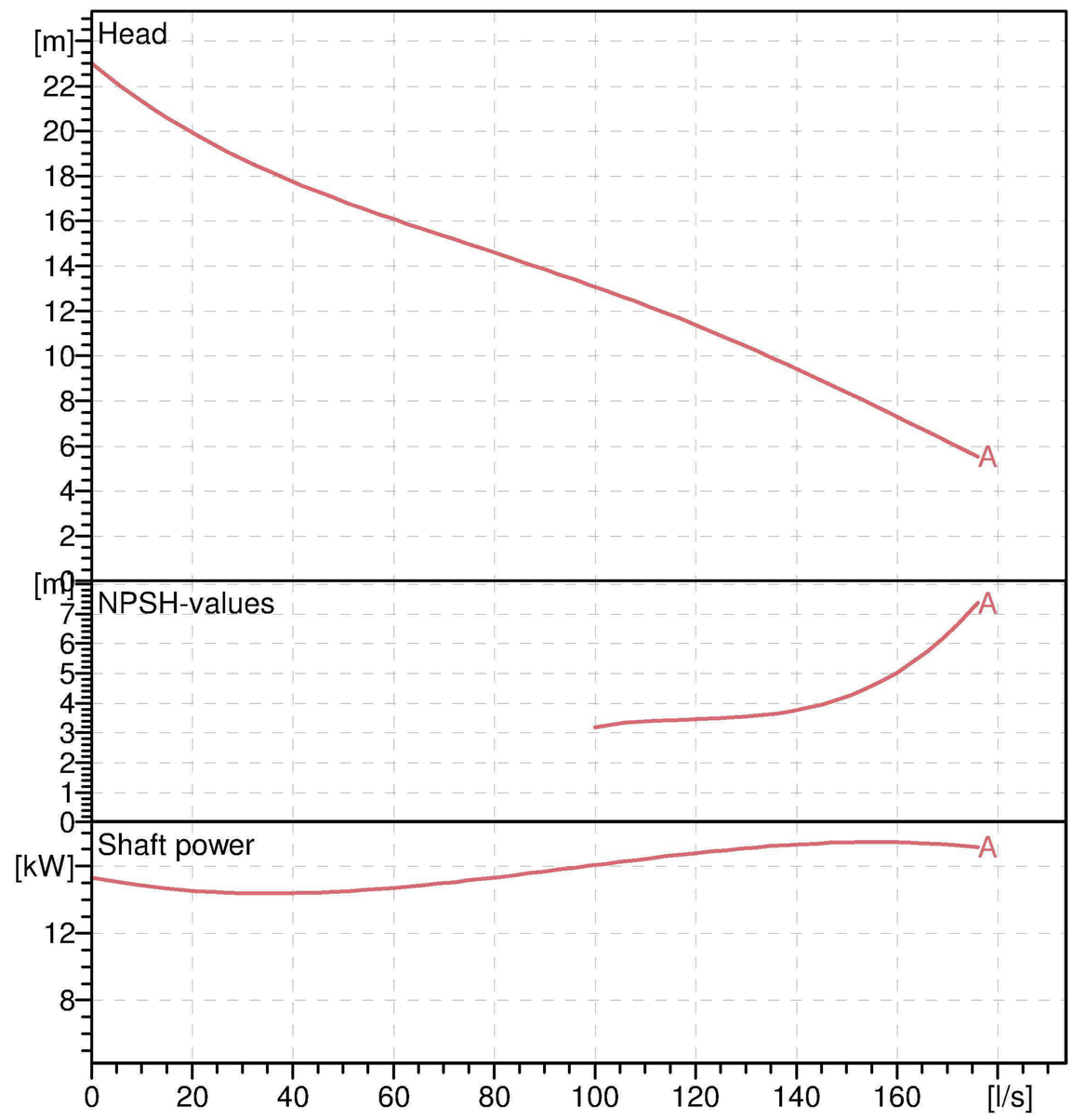

Operating data

ISO 9906 grade 2

Q [l/s]	H [m]	P [kW]	Eff. [%]	NPSH [m]
0	12,8			

DIMENSIONS mm

A = 1165
B = 615
b = 880
C = 765
D = 340
d = 35
DN = 250/PN10
DNp = 250/PN10
E = 275
f = 220
F = 455
G = 310
g = 380
h = 158
H = 185
J = 350
K = 395
Ls1 = 1000
Ls3 = 470
m = 595
n = 345
oa" = 3
oe = 12,5
oX = 22
p = 24
q = 380
r = 250
t = 623
u = 970
v = 117
W = 12

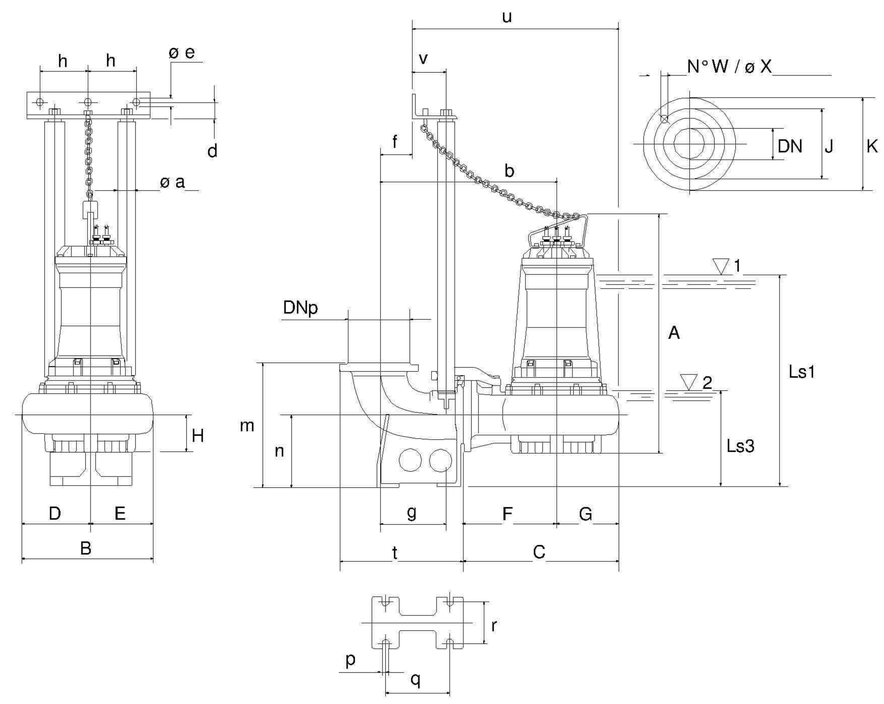

Remarks:

Date	Page	Offer no.	Pos.no