KCX-40.65.4LG

Requested data

Flow	0 l/s
Head	0 m
Fluid	
Pumpe type	Single head pump
No. of pumps	1

Operating pump data

Flow	
Head	
Shaft power	
Efficiency	%
Head H(Q=0)	19,7 m
Discharge connection	150 mm
Installation	Submersed automatic coupling
Impeller	Single channel
Free passage	100 mm

Motor data

Frequency	50 Hz
Rated voltage	400 V
Nominal speed	1450 1/min
Number of poles	4
Rated power P2	6,5 kW
Rated current	14 A
Motor type	3~
Insulation class	F
Degree of protection	IP 68

Operating limits

Starts per hour max.	15
Maximum temperature of pumped fluid	40 °C
Max. Density	998 kg/m³
Max. viscosity	1 mm²/s

General data

Weight	156 kg
Flameproof version	ATEX II 2G EExd IIB T4

Materials

Pump casing	Grey cast iron
Impeller	Grey cast iron
Wear ring	Steel/rubber
Suction casing	Grey cast iron
Mech. seal on pump side	Silicon carbide/Ceramics
Oil chamber	Grey cast iron
Motor casing	Grey cast iron
Shaft	Stainless steel
Thermal probes	Yes
Conductivity probe	Yes
Mech. seal on motor side	Graphite/Ceramics
Handle	Stainless steel
Power supply cable	10m
Screws and nuts	Stainless steel

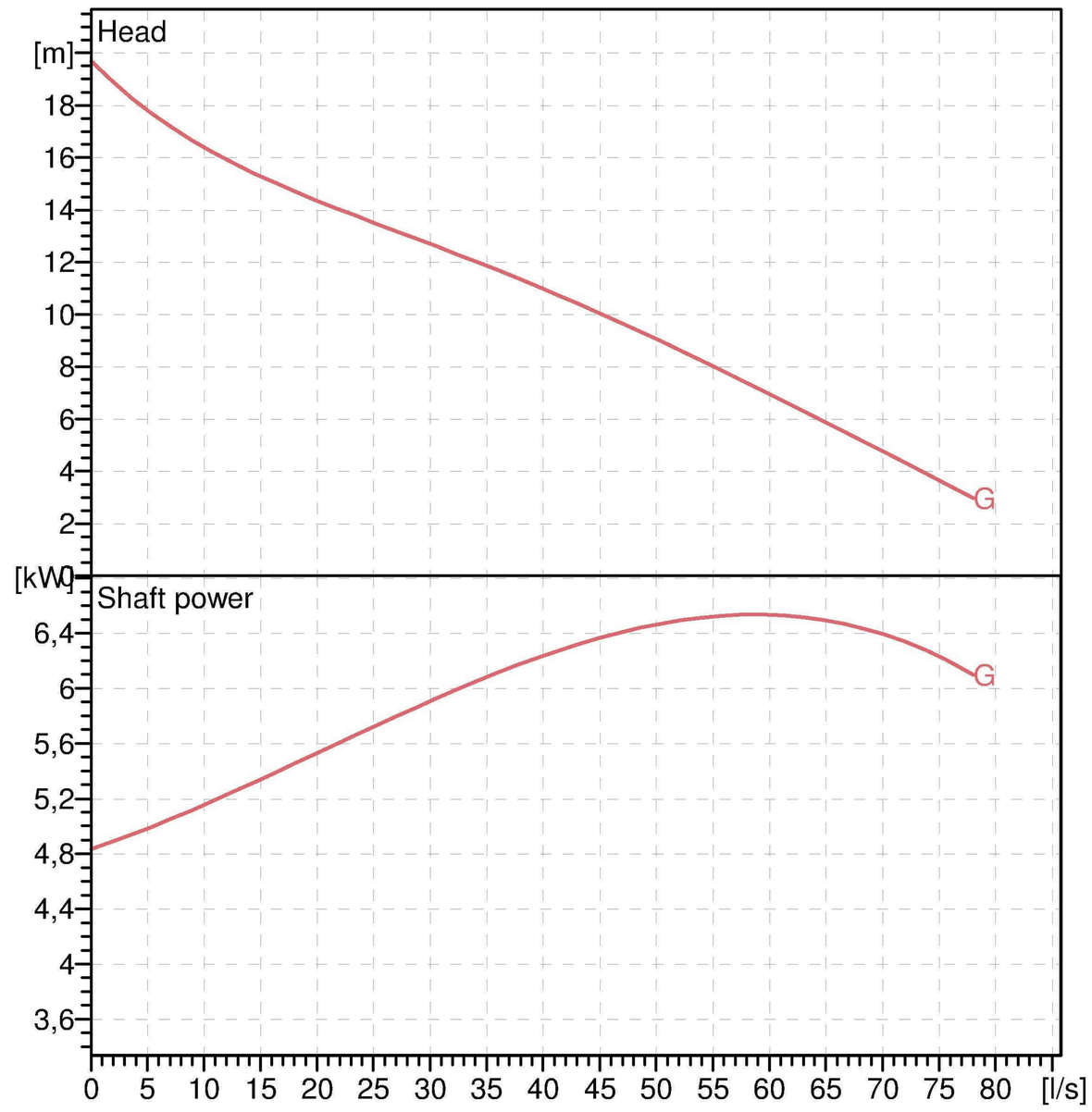

Operating data

ISO 9906 grade 2

Q [l/s]	H [m]	P [kW]	Eff. [%]	NPSH [m]

DIMENSIONS mm

A = 830
a = o2"
B = 467
b = 755
C = 715
D = 240
d = 35
DN = 150/PN16
DNp = 150/PN16
E = 227
e = o12,5
F = 495
f = 75
g = 201
G = 220
H = 138
h = 158
J = 240
K = 285
Ls1 = 675
Ls3 = 324
m = 435
N = 113
n = 235
oX = 22
p = 19
q = 214
r = 194
t = 403
u = 907
v = 102
W = 8

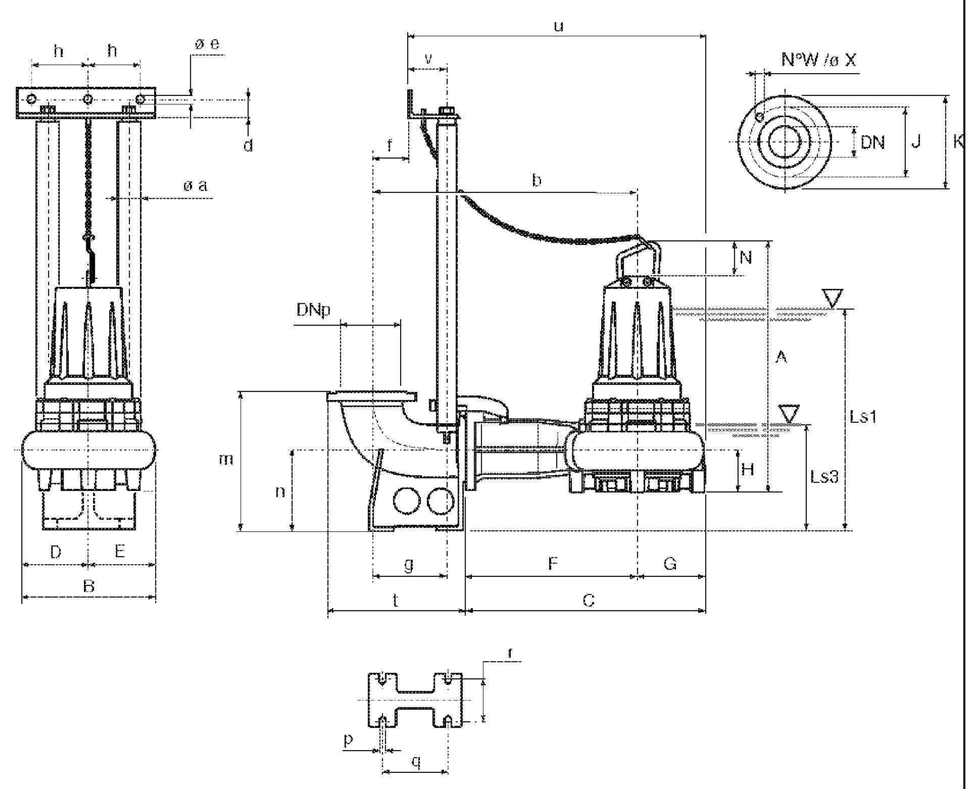

Remarks:

Date	Page	Offer no.	Pos.no