KCX-40.110.2LA

Requested data

Flow	0 l/s
Head	0 m
Fluid	
Pumpe type	Single head pump
No. of pumps	1

Operating pump data

Flow	
Head	
Shaft power	
Efficiency	%
Head H(Q=0)	52 m
Discharge connection	80 mm
Installation	Permanent submersible installation DN100/PN16
Impeller	Single channel
Free passage	55 mm

Motor data

Frequency	50 Hz
Rated voltage	400 V
Nominal speed	2900 1/min
Number of poles	2
Rated power P2	11 kW
Rated current	22 A
Motor type	3~
Insulation class	F
Degree of protection	IP 68

Operating limits

Starts per hour max.	10
Maximum temperature of pumped fluid	40 °C
Max. Density	998 kg/m³
Max. viscosity	1 mm²/s

General data

Weight	137 kg
Flameproof version	ATEX II 2G EExd IIB T4

Materials

Pump casing	Grey cast iron
Impeller	Grey cast iron
Wear ring	Steel/rubber
Suction casing	Grey cast iron
Mech. seal on pump side	Silicon carbide/Ceramics
Oil chamber	Grey cast iron
Motor casing	Grey cast iron
Shaft	Stainless steel
Thermal probes	Yes
Conductivity probe	Yes
Mech. seal on motor side	Graphite/Ceramics
Handle	Stainless steel
Power supply cable	10m
Screws and nuts	Stainless steel

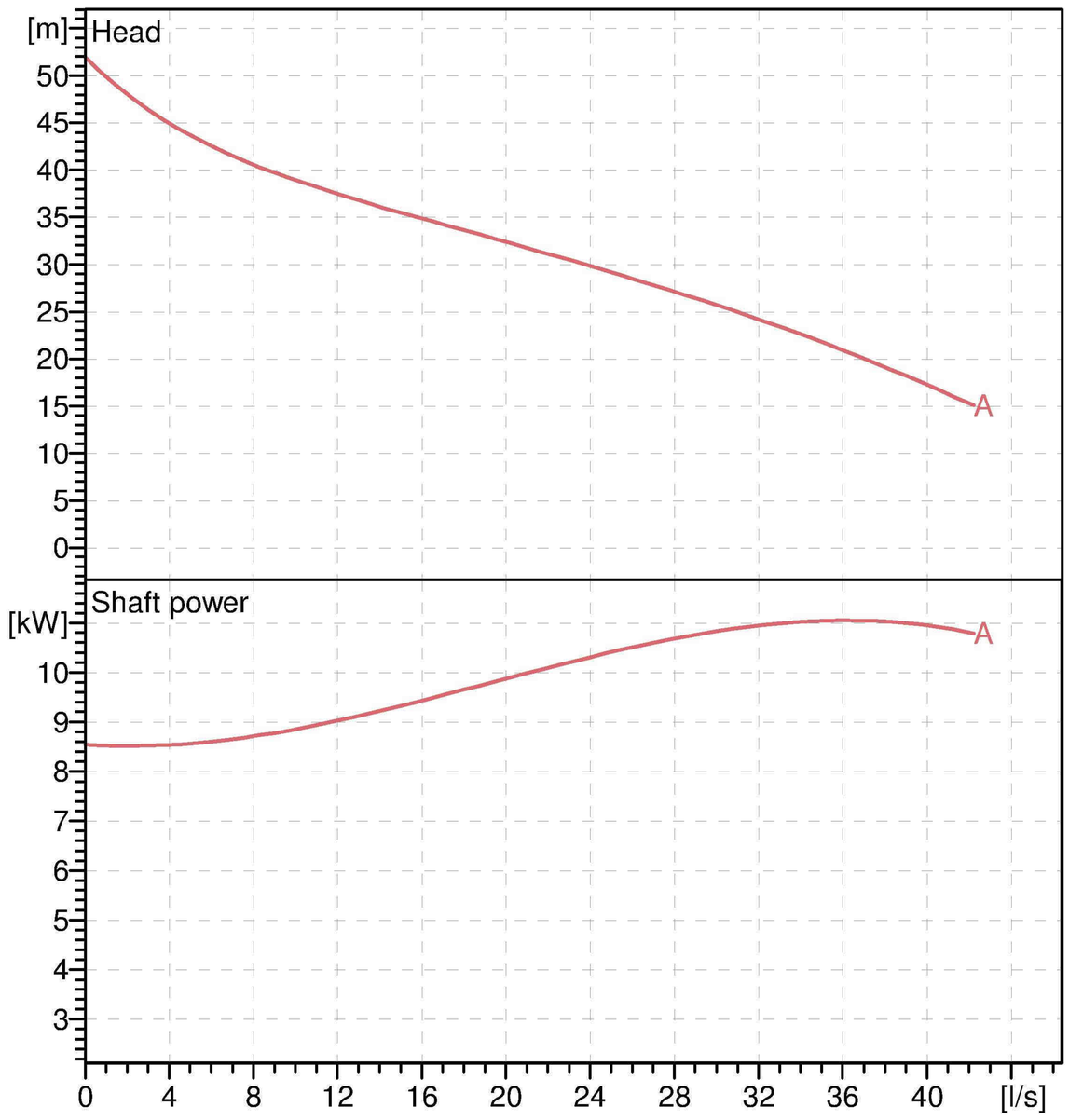

Operating data

ISO 9906 grade 2

Q [l/s]	H [m]	P [kW]	Eff. [%]	NPSH [m]

A = 785
a = o2"
B = 338
b = 553
C = 498
D = 180
d = 35
DN = 100/PN16
DNp = 100/PN16
E = 158
e = o12,5
F = 325
f = 48
G = 173
g = 181
h = 130
H = 95
J = 180
K = 220
Ls1 = 618
Ls3 = 267
m = 320
N = 113
n = 180
oX = 18
p = 18
q = 156
r = 110
t = 338
u = 678
v = 102
W = 8

DIMENSIONS mm

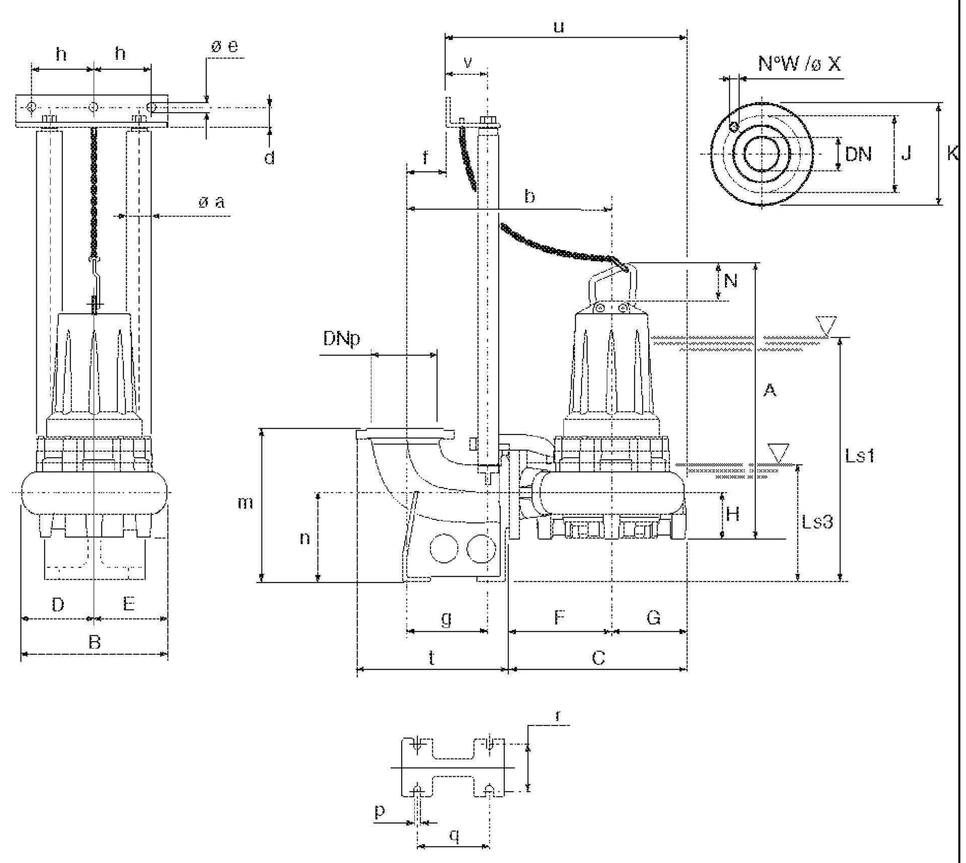

Remarks:

Date	Page	Offer no.	Pos.no