KCX-20.11.6HG

Requested data

Flow	0 l/s
Head	0 m
Fluid	
Pumpe type	Single head pump
No. of pumps	1

Operating pump data

Flow	
Head	
Shaft power	
Efficiency	%
Head H(Q=0)	6,54 m
Discharge connection	100 mm
Installation	Submersed automatic coupling
Impeller	Single channel
Free passage	80 mm

Motor data

Frequency	50 Hz
Rated voltage	400 V
Nominal speed	960 1/min
Number of poles	6
Rated power P2	1,1 kW
Rated current	2,8 A
Motor type	3~
Insulation class	F
Degree of protection	IP 68

Operating limits

Starts per hour max.	20
Maximum temperature of pumped fluid	40 °C
Max. Density	998 kg/m³
Max. viscosity	1 mm²/s

General data

Weight	69 kg
Flameproof version	ATEX II 2G EExd IIB T4

Materials

Pump casing	Grey cast iron
Impeller	Grey cast iron
Wear ring	Steel/rubber
Suction casing	Grey cast iron
Mech. seal on pump side	Silicon carbide/Ceramics
Oil chamber	Grey cast iron
Motor casing	Grey cast iron
Shaft	Stainless steel
Thermal probes	Yes
Conductivity probe	Yes
Mech. seal on motor side	Graphite/Ceramics
Handle	Stainless steel
Power supply cable	10m
Screws and nuts	Stainless steel

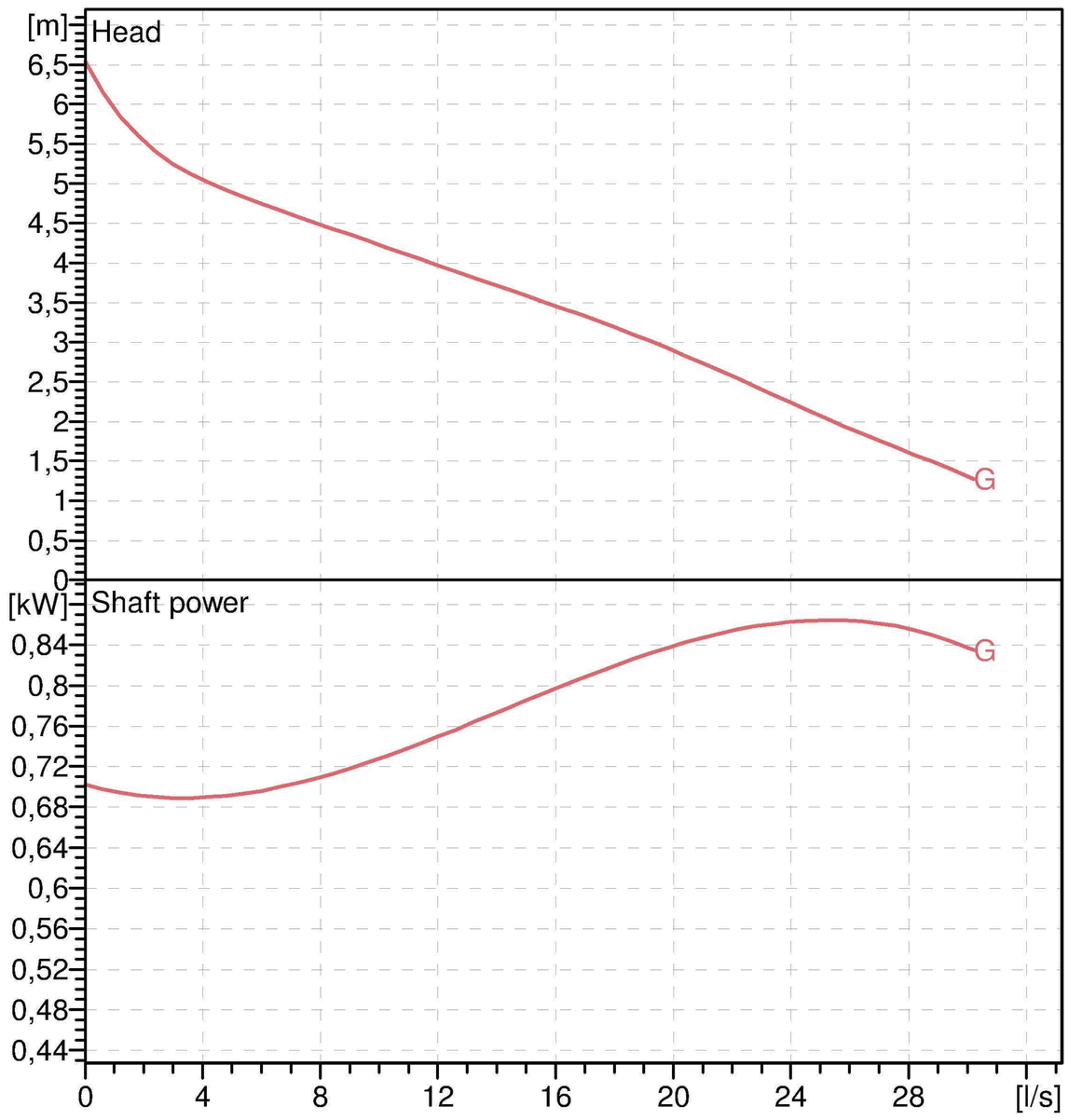

Operating data

ISO 9906 grade 2

Q [l/s]	H [m]	P [kW]	Eff. [%]	NPSH [m]

DIMENSIONS mm

A = 558
a = o2"
B = 370
b = 483
C = 435
D = 198
d = 35
DN = 100/PN16
DNp = 100/PN16
E = 172
e = o12,5
F = 255
f = 48
g = 179
G = 180
H = 118
h = 130
J = 180
K = 220
Ls1 = 503
Ls3 = 281
m = 350
n = 200
N = 80
oX = 18
p = 18
q = 186
r = 135
t = 338
u = 615
v = 102
W = 8

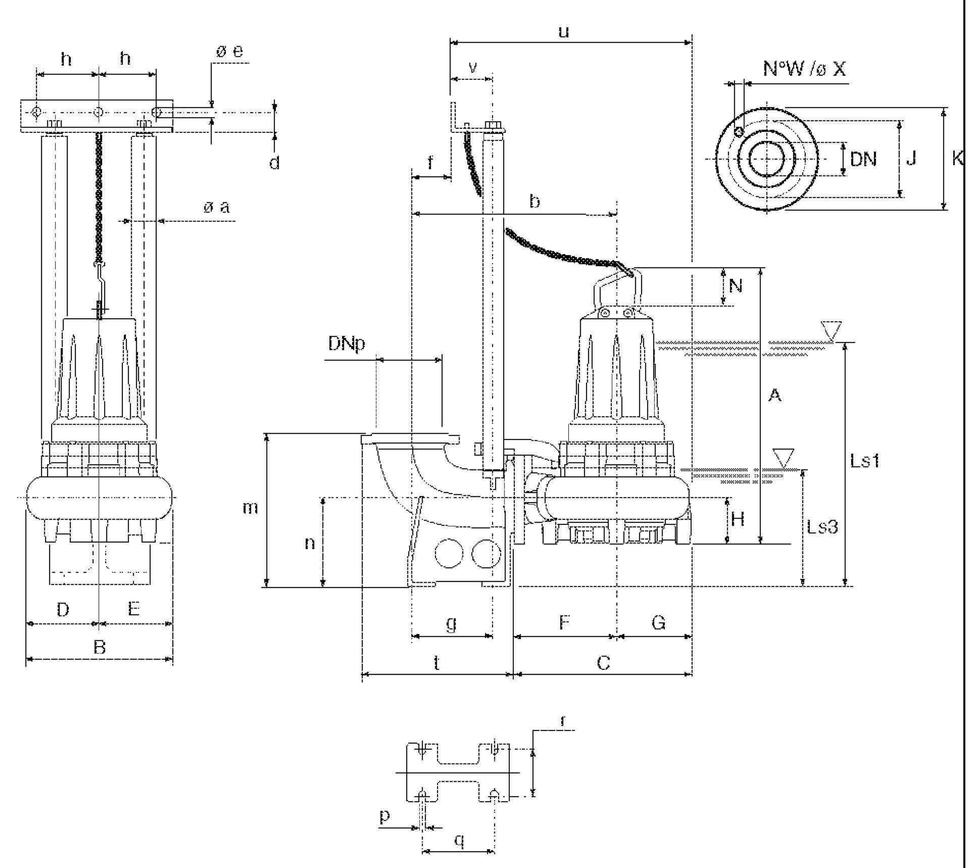

Remarks:

Date	Page	Offer no.	Pos.no