KCDX-80.370.6RL-Z

Requested data

Flow	0 l/s
Head	0 m
Fluid	
Pumpe type	Single head pump
No. of pumps	1

Operating pump data

Flow	
Head	
Shaft power	
Efficiency	%
Head H(Q=0)	12,4 m
Discharge connection	300 mm
Installation	Horizontal dry pit installation
Impeller	2-channel
Free passage	143 mm

Motor data

Frequency	50 Hz
Rated voltage	400 V
Nominal speed	974 1/min
Number of poles	6
Rated power P2	37 kW
Rated current	75 A
Motor type	3~
Insulation class	F
Degree of protection	IP 68

Operating limits

Starts per hour max.	10
Maximum temperature of pumped fluid	40 °C
Max. Density	998 kg/m³
Max. viscosity	1 mm²/s

General data

Weight	1020 kg
Flameproof version	ATEX II 2G EExd IIB T4

Materials

Pump casing	Cast iron
Impeller	Cast iron
Wear ring	Steel/rubber
Shaft	Stainless steel
Mech. seal on pump side	Silicon carbide/Sil. Carbide
Oil chamber	Cast iron
Motor casing	Cast iron
Outer shell (version R)	Stainless steel
Thermal probes	Yes
Conductivity probe	Yes
Mech. seal on motor side	Graphite/Stainless steel
Screws and nuts	Stainless steel
Power supply cable	10m

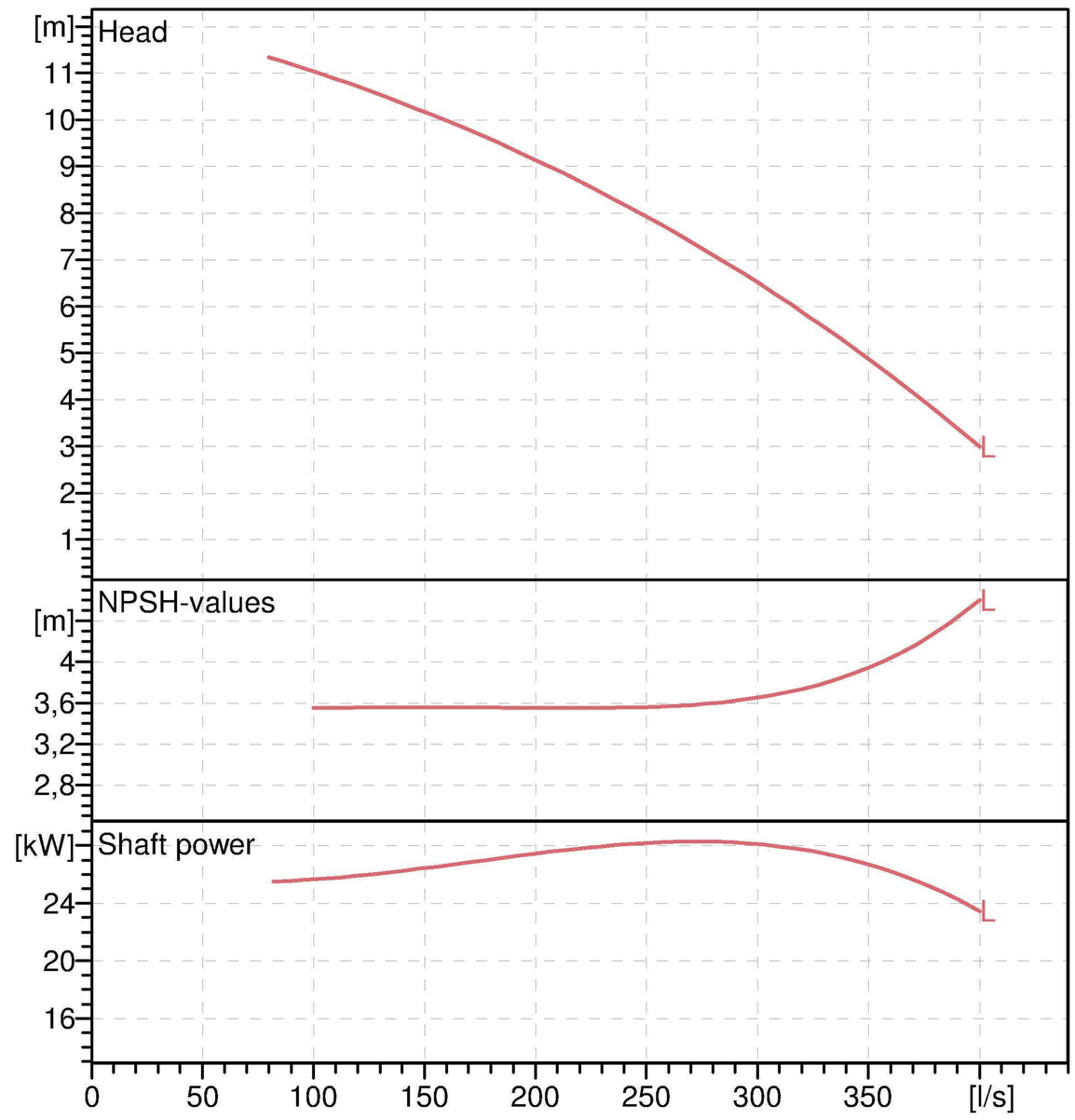

Operating data

ISO 9906 grade 2

Q [l/s]	H [m]	P [kW]	Eff. [%]	NPSH [m]

DIMENSIONS mm

a = 1150
A = 820
b = 1619
B = 340
C = 480
d = 390
DNa = 300/PN10
DNm = 300/PN10
e = 1519
f = 500
g = 270
h = 2
i = 22
J = 400
K = 445
m = 3
on = 22
oX = 22
p = 530
W = 12

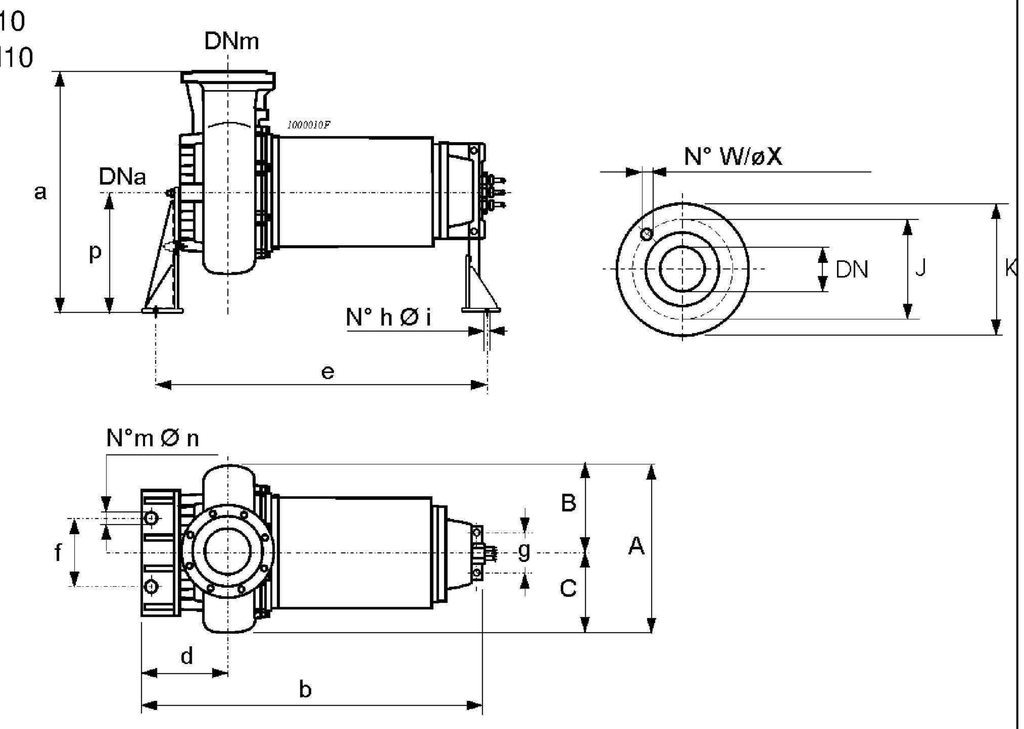

Remarks:

Date	Page	Offer no.	Pos.no