KCD-80.420.8RA

Requested data

Flow	0 l/s
Head	0 m
Fluid	
Pumpe type	Single head pump
No. of pumps	1

Operating pump data

Flow	
Head	
Shaft power	
Efficiency	%
Head H(Q=0)	13,5 m
Discharge connection	350 mm
Installation	Submersed automatic coupling
Impeller	2-channel
Free passage	164 mm

Motor data

Frequency	50 Hz
Rated voltage	400 V
Nominal speed	750 1/min
Number of poles	8
Rated power P2	42 kW
Rated current	90,5 A
Motor type	3~
Insulation class	F
Degree of protection	IP 68

Operating limits

Starts per hour max.	10
Maximum temperature of pumped fluid	40 °C
Max. Density	998 kg/m³
Max. viscosity	1 mm²/s

General data

Weight	1160 kg

Materials

Pump casing	Cast iron
Impeller	Cast iron
Wear ring	Steel/rubber
Shaft	Stainless steel
Mech. seal on pump side	Silicon carbide/Sil. Carbide
Oil chamber	Cast iron
Motor casing	Cast iron
Outer shell (version R)	Stainless steel
Thermal probes	Yes
Conductivity probe	Yes
Mech. seal on motor side	Graphite/Stainless steel
Screws and nuts	Stainless steel
Power supply cable	10m

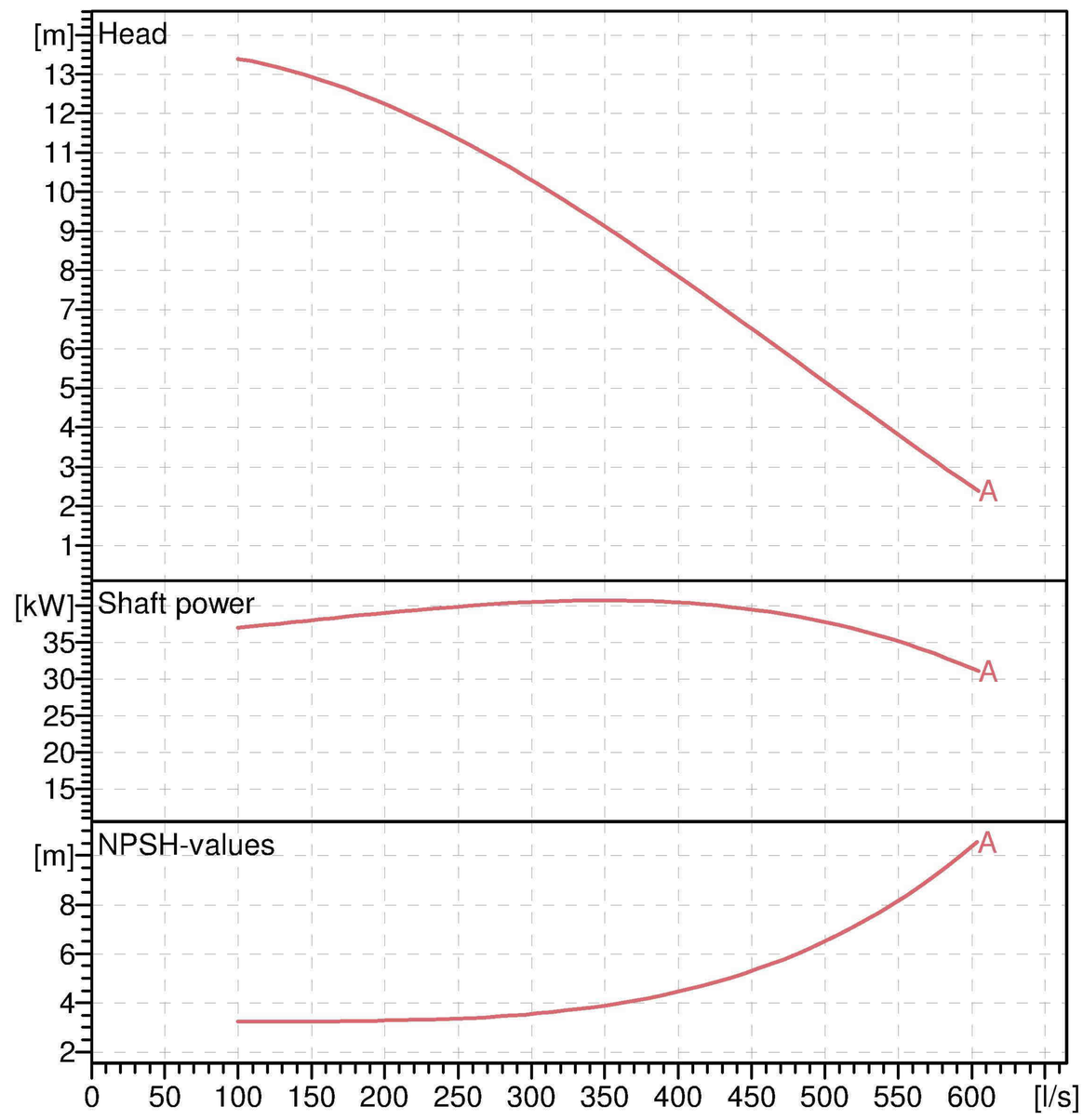

Operating data

ISO 9906 grade 2

Q [l/s]	H [m]	P [kW]	Eff. [%]	NPSH [m]

DIMENSIONS mm

A = 1675
b = 1225
B = 935
C = 1170
d = 35
D = 550
DN = 350/PN10
DNp = 400/PN10
E = 385
f = 320
F = 700
g = 430
G = 470
h = 157,5
H = 270
J = 515
K = 565
Ls1 = 1485
Ls3 = 740
m = 920
n = 575
oa = 3"
oe = 12,5
oX = 25
p = 24
q = 510
r = 400
t = 810
u = 1120
v = 117
W = 16

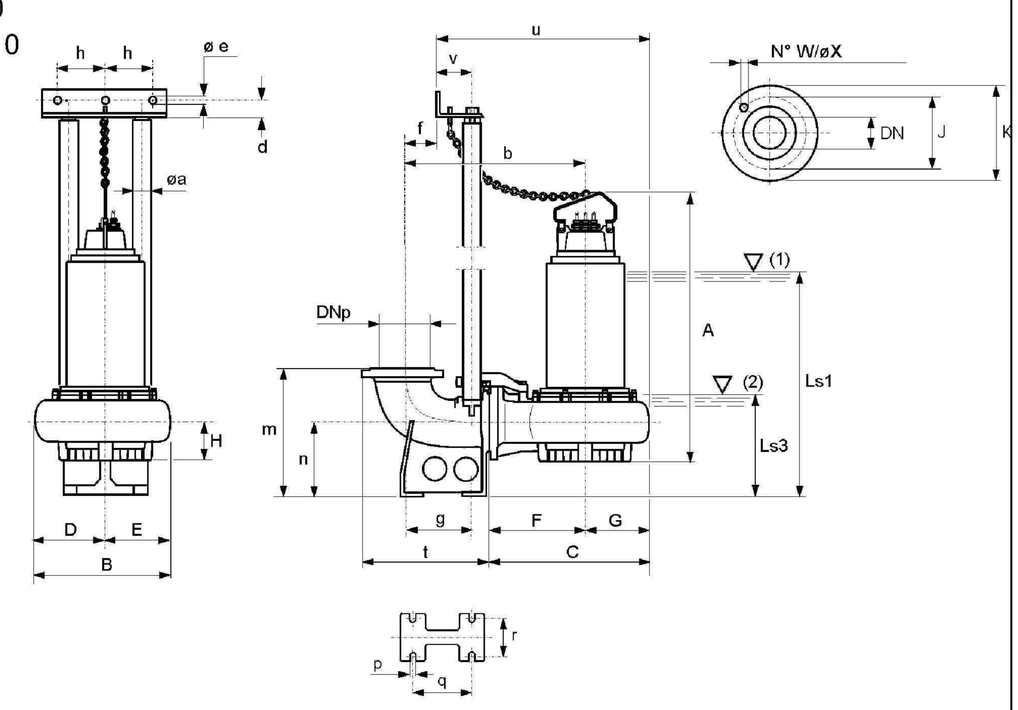

Remarks:

Date	Page	Offer no.	Pos.no