KONTROL - KC-40.

Maximal control - Minimal costs

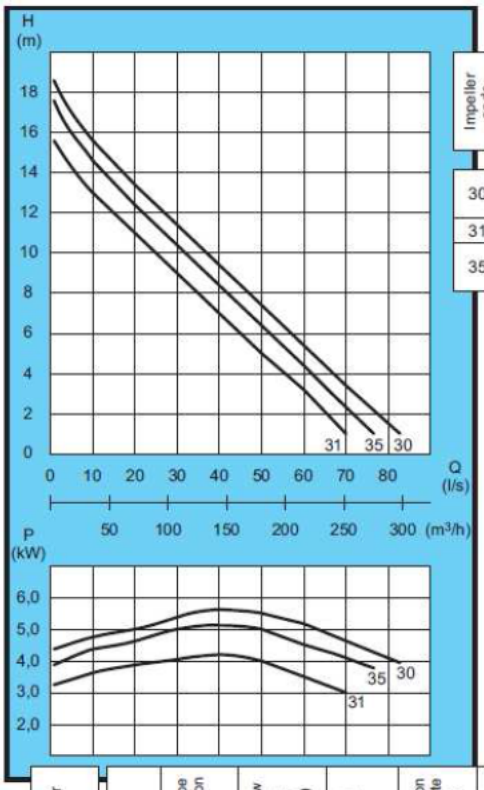

Impeller code	Type: Immersible	Type: S Portable	Type: T Dry	Weight equipment (kg)
30	●	●		161
	○	○	●	
31	●	●	●	
35	●	●		
	○	○	●	

Immersible

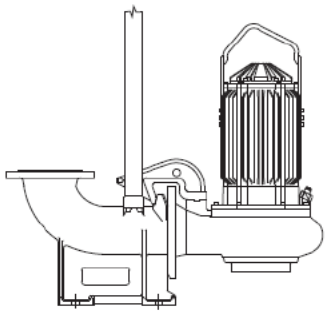

Portable

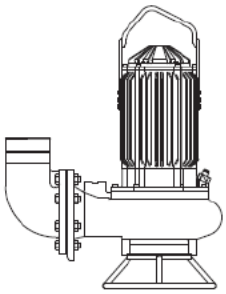

Dry

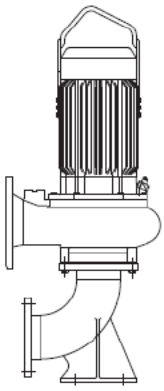

Impeller code	Type	Force pipe connection (DN)	Free flow cross-section (Ø mm)	Rated power (kW)	Revolution per minute (r.p.m)	Rated current consumption (A)	Starting current consumption (A)	Cos φ	Cable cross-section (mm²)
400 V, 50 Hz (400/230V or 690/400V)									
30	41.430	150 vagy 200	100	5,5	1445	11,2	71,2;19,2	0,82	2,5
				7,5	1450	15,2	98,8;27,4		4;2,5
31	42.431		90	5,5	1445	11,2	71,2;19,2		2,5
35	41.435		100	7,5	1450	15,2	98,8;27,4		4;2,5

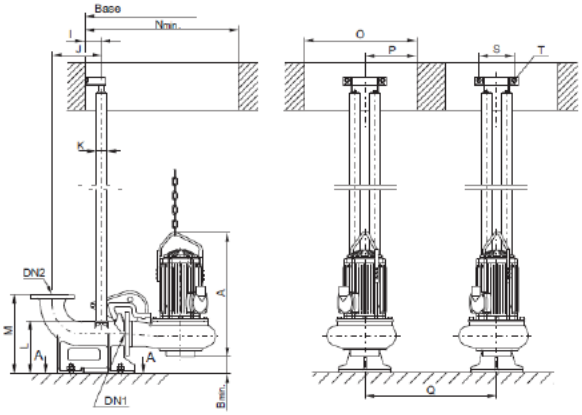

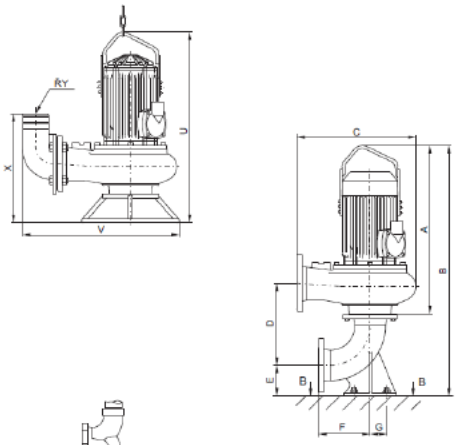

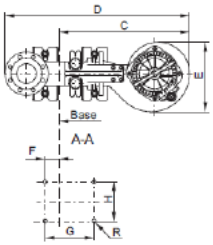

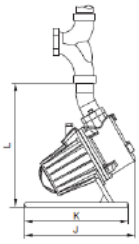

Type	DN	A	Bmin	C	D	E	F	G	H	I	J	K	L	M	Nmin	O	P	Q	R	S	T	DN1	DN2
	mm																						
KC-41.430 ,431 .435	150/150	842		721	1060	451	109	280	250	85	279	2"	365	450	780	570		~670	M20	195	M12	150	150
KC-41.430 ,431 .435	150/150/200	842		721	1115	451	139	280	250	85	309	2"	380	450	780	570		~670	M20	195	M12	150	200